Copying of this document and giving it to others and the use or communication of the contents thereof, are forbidden without express authority. Offenders are liable to the payment of damages. All rights are reserved in the event of the grant of a patent or the registration of a utility model or design.

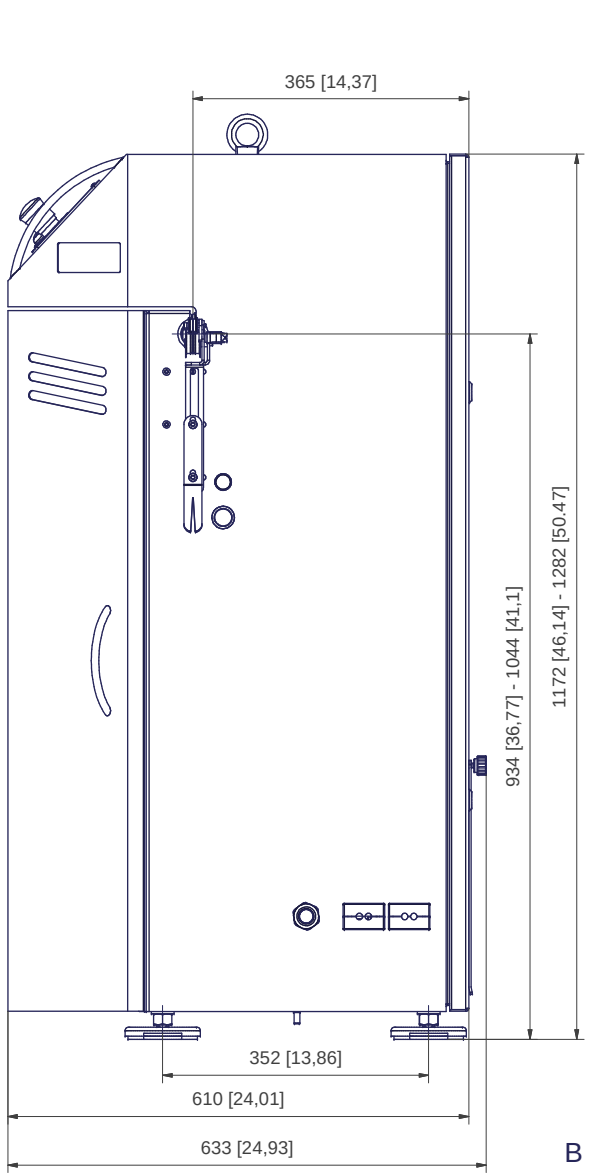

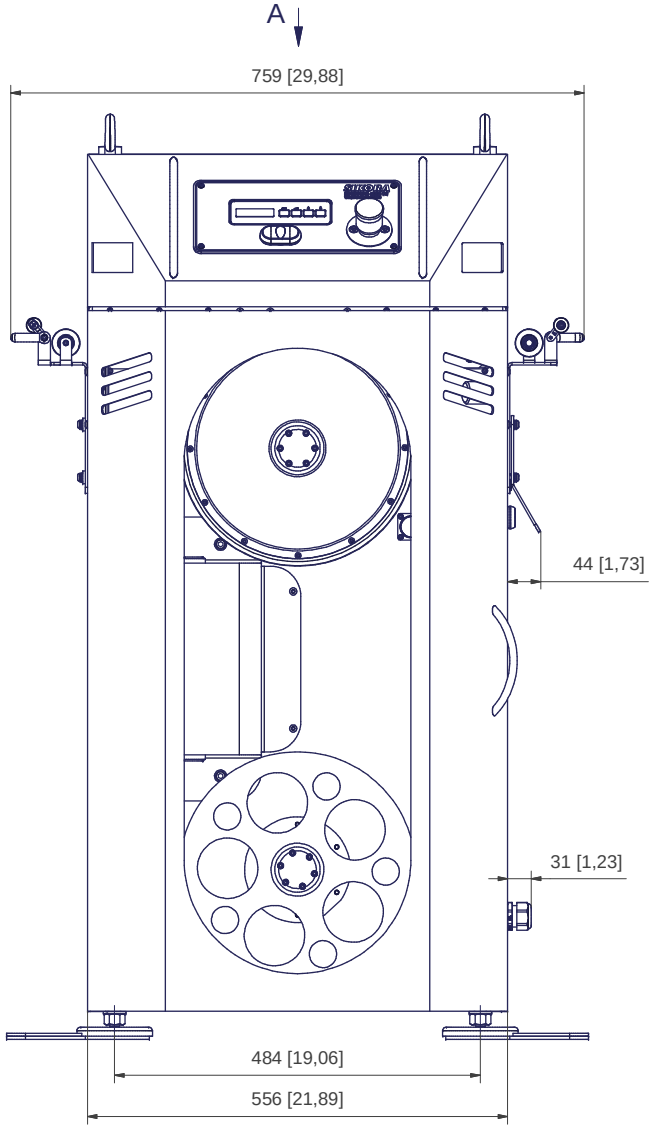

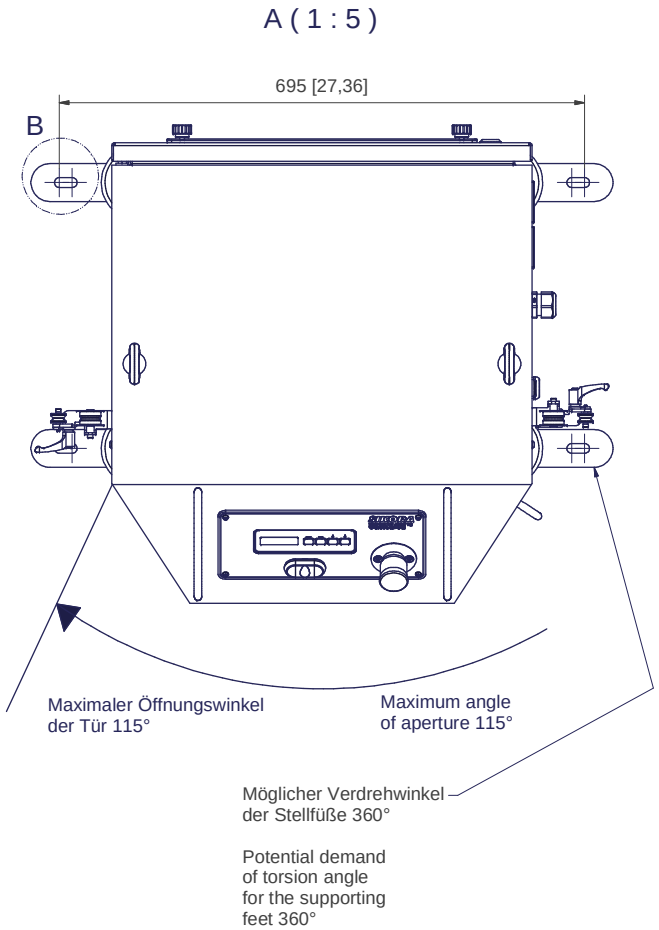

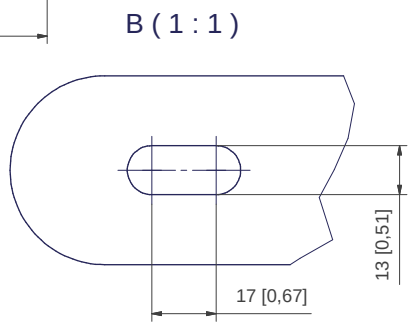

Identnummer / *Part no.*	Allgemeintoleranzen / *General tolerances* ISO 2768-mK	Maßstab / *Scale* 1:5, 1:1	Gewicht / *Weigth* -
		Benennung / *Title* Preheater 6000 TC II	
	Drawn 18.03.2016 J.Husse		
	Checked		
	Approved		
	SIKORA Technology To Perfection SIKORA AG Bruchweide 2 28307 Bremen Germany	Zeichnungsnummer / *Dwg no.* FT100	Blatt / *Sheet* 1 / 1
Rev / Modification / Date / Name	File FT100 Preheater 6000 TC II.idw	Rev.:	Original size DINA2